SCA900TB

TELESCOPIC BOOM CRAWLER CRANE

- 90 USt (81.6 mt)
- 154.2 ft (47 m)
- 154.2 ft + 57.4 ft (47 m + 17.5 m)





Telescopic Boom Crawler Crane

SCA900TB

P02	**Major Specifications**	• Product Specification • Safety Device
P08	**Technical Parameters**	• Major Performance & Specifications • Outline Dimension • Transport Dimension
P13	**Configurations**	• Working range of H • Load Chart of H • Load Chart of FJ

A

SCA900TB
TELESCOPIC BOOM CRAWLER CRANE
90 UST (81.6 mt) LIFTING CAPACITY

MADE FOR AMERICA

Major Specifications

- Page 03 Product Specification
- Page 06 Safety Device

Product Specification

Engine

- Model: Cummins L9-C325 325 HP, Stage V;
- Type: 4-stroke, water-cooled, vertical in-line 6 cylinders, direct injection, turbo-charger, intercooler, complied with European Off Highway Stage V Emission Standard and US EPA Tier F4(f) Emission Standard;
- Displacement: 543 in^3 (8.9L);
- Max Rated Power: 325 HP/1800rpm;
- Max. Torque: 1,126 ft-lb/1500rpm;
- Starter: 24V-6.7 HP;
- Radiator: fin type core in aluminum;
- Air Cleaner: dry type main filter element, safety element core and resistance indicator;
- Throttle: electrically control hand and foot throttle;
- Fuel Filter: replaceable paper element;
- Batteries: Two 12V×180Ah capacity batteries, connected in series (24V system);
- Fuel Tank Capacity: 105.7Gal (400L).

Hydraulic system

- Main Pumps: variable displacement piston pumps provide power for the main machine functions;
- Gear Pumps: two gear pumps provide power for radiator and control circuit;
- Control: electrically controlled positive hydraulic flow control allows for safe and precise multifunction operation;
- Oil Cooler: Fan cooled heat exchanger provides multi stage hydraulic oil cooling;
- Filter: peak flow, high efficiency filter with bypass valve and replacement filter indicator. Indicator will remind user when its time to replace filter;
- Max. Pressure of System: 4641 psi
  Main/Aux. Load Hoist and Travel System: 4641 psi;
  Boom Hoist Cylinder: 4641 psi;
  Swing System: 2900 psi;
  Pilot Pressure: 725 psi;
- Hydraulic Tank Capacity: 251Gal (950L).

Electrical control system

- Self developed SYIC II control system is highly integrated to provide safe, precise, and reliable operation;
- Control system consists of power system, engine, main control system, LMI system, auxiliary system and safety monitoring system;
- CAN BUS is used for data communication between controller, monitor and the engine;
- The in-cab monitor displays the status and working parameters for engine speed fuel level, engine oil pressure, pilot pressure. engine hours, boom configuration, hook radius, hook height, boom angle, wind speed, load on hook, and safety warnings.

Main/aux. load hoist winch

- Main and aux. winches are driven by variable displacement pump, variable speed hydraulic motor and gear box;
- Winch drum laggings are grooved for multilayer spooling. Winch drum laggings are grooved for multilayer spooling.

Main Load Hoist Winch	Rope speed on the outermost layer	0-459.3ft/min (0-140m/min)
	Wire rope diameter	0.87" (22mm)
	Main hoist rope length	803.8' (245m)
	Rated single line pull	17.6Klb (8.0t)
Axu. Load Hoist Winch	Rope speed on the outermost layer	0-459.3ft/min (0-140m/min)
	Wire rope diameter	0.87" (22mm)
	Aux. hoist rope length	475.7' (145m)
	Rated single line pull	17.6Klb (8.0t)

In the interest of continual equipment development, SANY America Inc. reserves the right to change these specifications at any time without prior notification.

Product Specification

Boom hoist mechanism

- Dual-acting single piston hydraulic cylinder, with counterbalance valve, and a boom angle range of -1.5°~ 80°.

Swing mechanism

- Swing Brake: spring applied wet brake that is normally closed providing controlled smooth braking;
- Swing system has three work modes to accommodate different needs: auto brake mode, free swinging mode, and fine inching mode;
- Swing Drive: external gear swing drive with 360° swing range, max. swing speed is 2 rpm;
- Swing Bearing: single row ball bearing.

Cab and control

- Operator's cab has a hinged lockable door and large windows providing excellent line of sight. The cab tilts up 20° providing the operator a panorama view and reducing fatigue. The cab and control layout allow for ergonomic operation keeping the operator comfortable;
- Monitor: 10.4 touch screen with simple user friendly interface;
- Armrest Console: control handles electrical switches, emergency stop, and ignition switch are located on the left and right. Arm console can be adjusted independent of the seat;
- Seat: multi-way adjustable floating seat;
- HVAC: powerful air conditioner and heater with optimized vent locations;
- Cameras: multiple cameras can be displayed on the monitor at the same time. This provides the operator with a real time view of winches, right side of machine, rear of machine , and view from boom tip.

Counterweight

- Counterweight tray and blocks nest together for easier assembly and transport. Rear and carbody counterweight can be self-assembled;
- Total 57.3Klb (26t) 36.4 Klb (16.5mt) counterweight tray x1, 5.3 Klb (2.4 mt) counterweight block 1 x2, 5.3 Klb (2.4 mt) counterweight block 2 x2;
- Carbody counterweight: 6.6Klb×2 (3t×2) at the front and rear of carbody.

Upperworks

- High-strength steel welded frame. Design allows for easy maintenance and service.

In the interest of continual equipment development, SANY America Inc. reserves the right to change these specifications at any time without prior notification.

Product Specification

Crawler Assembly

- Each side frame is equipped with an independent travel driving motor. The variable speed travel system is configured with speed options to meet various requirements: low speed provides max tractive effort, while high speed provides fast job site transfer;
- Max travel speed is 1.6 mph;
- Max gradeability is 30%.

Crawler Tensioning

- Crawler tensioning can be adjustable with hydraulic jack and shimming the guide wheel.

Crawler Extension and Retraction

- The crawlers can be extended and retracted via hydraulic cylinders. In work mode the crawlers can be extended or retracted. For transportation the crawlers will be retracted.

Track Pad

- Manufactured by advance casting techniques and materials providing high strength and excellent wear resistance;
- 33.5in (850mm) wide and each side frame has 52 track pads.

Track Rollers

- Maintenance-free track rollers.

Jack Cylinders

- Standard jack cylinders make jobsite transport easier.

Boom

- The five section boom is made of high-strength steel structure with U-shape cross section area. Basic boom length is 40' (12.2m) and the max. length is 154'2" (47m);
- Full power telescoping with double acting cylinder and synchronized cables.

Fixed jib

- Two lengths of fixed jib, 33'6" (10.2m) and 57'5" (17.5m), each can be installed in offset angles 0°, 15°, 30°.

Auxiliary Boom Sheave

- Welded structure, connected to the boom through pins and used for aux. hook.

Hook Blocks/Ball

Load Capacity	Sheaves	Weight	QTY
90UST (80 mt)	5	2.3Klb (1.05 mt)	1
50UST (45 mt) (optional)	3	1.1klb (0.48 mt)	1
16UST (15 mt) (optional)	1	0.28klb (0.34 mt)	1
10UST (9 mt)	N/A	0.6klb (0.26 mt)	1

- Note: the above-mentioned operating equipment is fully loaded configuration. The actual configurations are subject to contract.

Hook limitation height

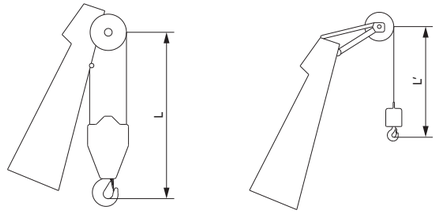

Hook	L	Hook	L'
90 UST (80 mt)	11.5ft (3.5m)	10 UST (9 mt)	9.8ft (3m)

In the interest of continual equipment development, SANY America Inc. reserves the right to change these specifications at any time without prior notification.

Safety Device

Assembly/Work Mode Control Switch

- In assembly mode, some of the safety devices are bypassed for helping crane assembly;
- In Work Mode, all safety devices activate.

Emergency Stop

- When this button is pressed down power supply to whole machine is cut off and all actions are stopped.

Load Moment Indicator (LMI)

- The proprietary load moment indicator is independently -developed by Sany, which is a specially designed over-load protective system for SCA series crawler crane, with performance structural parameters of all series of crawler cranes directly stored inside, such as bearing curve, boom and jib weight, center of gravity, and other geometrical parameters. This system maximizes the utilization efficiency of the crane while guaranteeing the lifting safety;
- The independent safety control system fully controlled by computer, the LMI can automatically detect the load weight, work radius, and boom angle, compare rated capacity with actual load, actual radius and actual boom angle. In normal operation, the LMI can intelligently determine and cut off the crane from dangerous operation. It also has a black box function and record overload information;
- LMI consists of a 10.4in large colorful display, computer, angle sensors, load sensors and pressure sensors.

Over-hoist Limit Switch of Main/Auxiliary Hooks (Anti Two Block)

- It is used to prevent the over-hoist of the hook. When the lifting hook is raised to a certain height, the limit switch will is activated, and hook hoisting will be automatically cut off by the control system;
- Warning will be displayed in monitor and alarm will sound. At this moment, only hook lowering is allowed to prevent over-hoist action.

Over-release Limit Switch of Main/Auxiliary Hooks (Third Wrap Indicator)

- Three-wrap protector is installed on main and aux. load hoist winches to prevent over-release of wire rope. When the rope is paid out close to the last three wraps, the limit switch activates, and the system sends alarm through buzzer and shows the alarm on the instrument panel, automatically cutting off the winch action.

Function Lock Lever

- If the function lock level is not in work position, all the other handles won't work, which prevents any mis-operation caused by control handle movement.

House Lock Device

- House lock can lock the machine in four positions, front, back, left and right.

Swing Lock

- Electrical lock is equipped, and swing action can only happen when the lock is released, so as to prevent any operational error and ensure the safety.

Hook Latch

- The lifting hook is installed with a baffle plate to prevent wire rope from falling off.

Zoom Camera

- It can monitor load lifting on the main hook and the surroundings in real time. The camera can zoom in/out as needed;
- Components: wireless remote transmitter, wireless remote receiver, zoom camera.

In the interest of continual equipment development, SANY America Inc. reserves the right to change these specifications at any time without prior work notification.

Safety Device

Tri-color Load Indicator

- The load indication light has three colors, green, yellow and red, indicating the real-time load. When the actual load is smaller than 90% of rated load, the green light is on;
- When the actual load is>90% and≤100%, the yellow light is on, the alarm light flashes and sends out intermittent sirens;
- When the actual load reaches 100% of rated load, the red light on, the alarm light flashes and sends out continuous sirens;
- When the actual load is 102% of rated load, the system will automatically cut off the crane's dangerous operation.

Audio-Visual Alarm

- Lights flash when the engine is running. During travel and swinging and audible alarm is sounded.

Swing Indicator Light

- The swing indicator light flashes during traveling or swinging.

Illuminating Light

- The machine is equipped with the low beam light and high beam light at the front of the cab, illumination light in cab, and other lights for night operation, boom lights to improve the visibility during operation.

Rearview Mirror

- It is installed on the left of the operator's cab for monitoring the rear part of the machine.

Seat Interlock

- If the function lever lock is lowered on the left side of cab seat or if the operator leaves the seat, all control levers will be deactivated to prevent any mis-operation due to accidental control handle movement.

Electronic Inclinometer

- List and trim angles are displayed in real time on the in cab monitor.

B

SCA900TB
TELESCOPIC BOOM CRAWLER CRANE
90 UST (81.6 mt) LIFTING CAPACITY

MADE FOR AMERICA

Technical Parameters

- Page 09 Major Performance & Specifications
- Page 10 Outline Dimension
- Page 11 Transportat Dimension

In the interest of continual equipment development, SANY America Inc. reserves the right to change these specifications at any time without prior notification.

Unit: fT (mm)

Major Performance & Specifications

Major Performance & Specifications of SCA900TB

Performance indicators		Unit	Parameter
Boom configuration	Maximum rated lifting capacity	UST (t)	90 (81.6)
	Boom length	fT (m)	40~154.2 (12.2~47)
	Boom angle	°	-1.5~80
	Max. rated load moment	Klb·fT (t·m)	2170Klb·fT (300)
Jib configuration	Longest boom + longest jib	fT (m)	154.2+57.4 (47+17.5)
	Boom to jib angle	°	0, 15, 30
Operation speed	Rope speed of main/aux. load hoist	ft/min (m/min)	0-459.4 (0~140)
	Boom full up/down duration	s	80/105
	Boom full extension/retraction duration	s	100/125
	Swing speed	rpm	0~2
	Travel without load	mph	0~1.6
Engine	Output power		325
	Rated speed	HP	1800
Wire rope	Diameter	in (mm)	0.87 (22)
Transport parameter	Machine weight with jib, counterweights, and crawlers	Klb (t)	193.3 (87.7)
	Transport weight of basic machine	Klb (t)	121.1 (54.9)
	Transport dimensions of basic crane (dismantling crawler frame) length×width×height	fT (mm)	47.8x11.5x11.5 (14560x3490x3500)
Other parameters	Average ground bearing pressure (base boom)	PSI	13
	Min. swing radius	fT (mm)	14.8 (4500)
Gradeability		%	30

In the interest of continual equipment development, SANY America Inc. reserves the right to change these specifications at any time without prior notification.

Outline Dimension

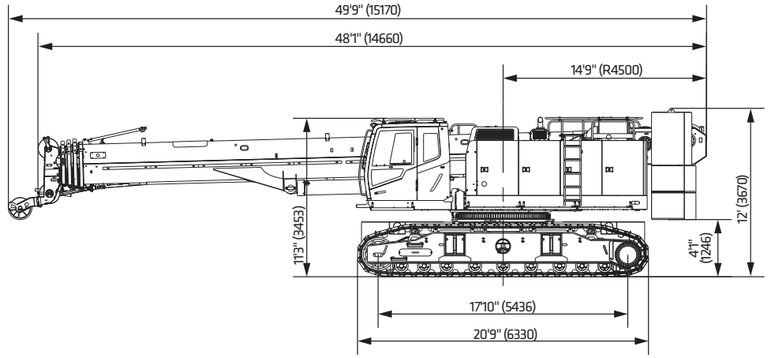

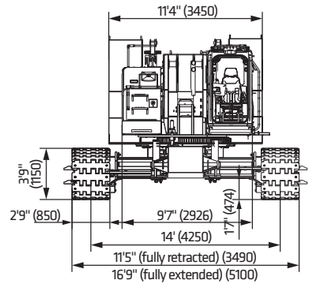

In the interest of continual equipment development, SANY America Inc. reserves the right to change these specifications at any time without prior notification.

Transport Dimension

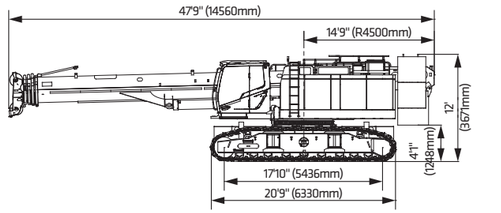

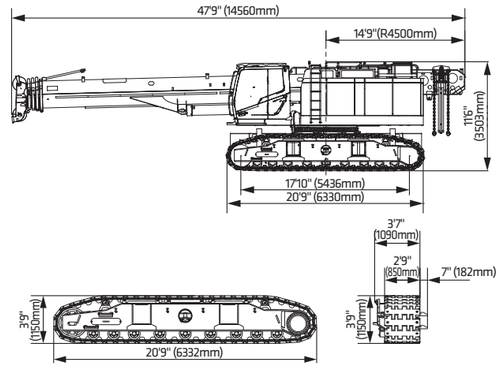

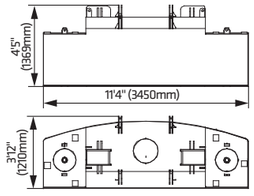

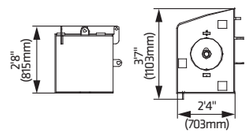

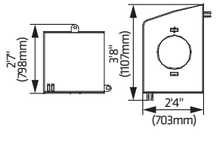

Whole Machine	×1
Length (L)	47.8fT (14.56m)
Width (W)	11.5fT (3.49m)
Height (H)	12fT (3.67m)
Weight	193.3Klb (87.7mt)

Basic Machine (with jib)	×1
Length (L)	47.8fT (14.56m)
Width (W)	11.5fT (3.49m)
Height (H)	11.5fT (3.50m)
Weight	121.1Klb (54.9mt)

Crawler Assembly	×2
Length (L)	20.8fT (6.33m)
Width (W)	3.6fT (1.09m)
Height (H)	3.8fT (1.15m)
Weight	20.6Klb (9.35mt)

Counterweight Tray	×1
Length (L)	11.3fT (3.45m)
Width (W)	3.97fT (1.21m)
Height (H)	4.49fT (1.37m)
Weight	36.4Klb (16.5mt)

Rear Counterweight I	×2
Length (L)	2.3fT (0.70m)
Width (W)	3.6fT (1.10m)
Height (H)	2.7fT (0.82m)
Weight	5.3Klb (2.4mt)

Rear Counterweight II	×2
Length (L)	2.3fT (0.70m)
Width (W)	3.64fT (1.11m)
Height (H)	2.62fT (0.80m)
Weight	5.3Klb (2.4mt)

In the interest of continual equipment development, SANY America Inc. reserves the right to change these specifications at any time without prior notification.

Transport Dimension

Remarks:
1. The transport dimensions of each part in the table are schematic, not proportional to the real parts. The dimensions are designed value without packing.
2. The Weight is designed value that the actual manufactured part may deviate a little. The total weight of counterweight is 57.3Klb (26mt).
3. The above dimensions and weight is subject to change due to product upgrading.

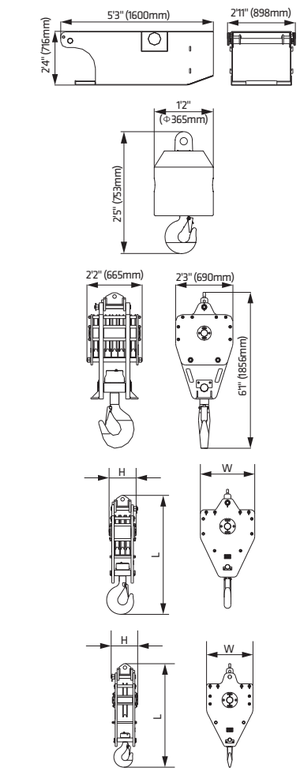

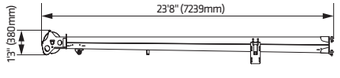

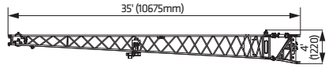

Carbody Counterweight	×2
Length (L)	6.6fT (1.60m)
Width (W)	3.0fT (0.90m)
Height (H)	2.4fT (0.72m)
Weight	6.6Klb (3.0mt)

10 UST (9mt) Hook Block	×1
Length (L)	2.5fT (0.75m)
Width (W)	1.2fT (0.37m)
Height (H)	1.2fT (0.37m)
Weight	0.41Klb (0.19mt)

90 UST (80mt) Hook Ball	×1
Length (L)	6.1fT (1.86m)
Width (W)	2.3fT (0.69m)
Height (H)	2.2fT (0.66m)
Weight	2.2Klb (1.0mt)

50 UST (45mt) hook (optional)	×1
Length (L)	5.0fT (1.52m)
Width (W)	2.3fT (0.69m)
Height (H)	1.2fT (0.37m)
Weight	1.1Klb (0.48mt)

16 UST (15mt) hook (optional)	×1
Length (L)	4.4fT (1.34m)
Width (W)	1.9fT (0.60m)
Height (H)	1.1fT (0.34m)
Weight	0.61Klb (0.28mt)

23.0ft (7m) Swing-away jib	×1
Length (L)	23.8fT (7.24m)
Width (W)	1.2fT (0.38m)
Height (H)	1.7fT (0.51m)
Weight	0.57Klb (0.26mt)

32.8ft (10m) Jib Section	×1
Length (L)	35.0fT (10.68m)
Width (W)	2.5fT (0.76m)
Height (H)	4.0fT (1.22m)
Weight	1.5Klb (0.69mt)

In the interest of continual equipment development, SANY America Inc. reserves the right to change these specifications at any time without prior notification.

C

SCA900TB
TELESCOPIC BOOM CRAWLER CRANE
90 UST (81.6 mt) LIFTING CAPACITY

MADE FOR AMERICA

Configurations

- Page 14 Working range of H
- Page 15 Load Chart of H
- Page 17 Load Chart of FJ

> 13

Working range of H

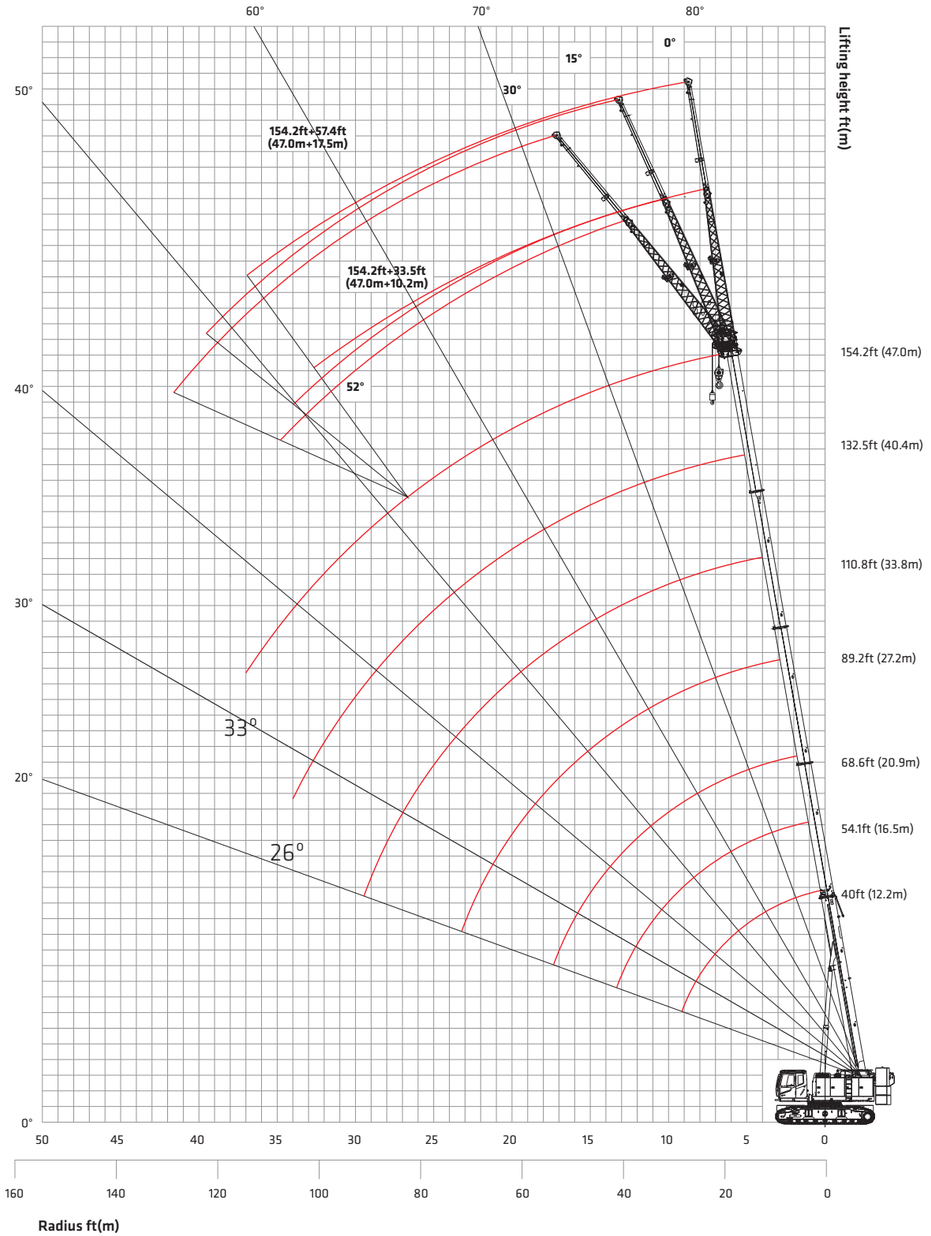

In the interest of continual equipment development, SANY America Inc. reserves the right to change these specifications at any time without prior notification.

Unit: t

Load Chart of H

H Configuration load chart

Radius(ft)	Rear Counterweight 57.3Klb, Carbody Counterweight 13.2Klb							Radius(ft)
	40	54.1	68.6	89.2	110.9	132.5	154.2	
10	180	141	-	-	-	-	-	10
12	158.2	132.9	-	-	-	-	-	12
15	141	130.2	93.3	-	-	-	-	15
20	109.1	102	85.3	65.1	52.1	43.4	-	20
25	80.7	80.3	67.3	58.2	45.6	38	-	25
30	58.2	57.7	57.1	52.7	44.5	34.7	25.8	30
35	-	42.3	40.8	42.5	35.7	30	23.6	35
40	-	36.2	33.8	38	32.5	27.1	23	40
45	-	-	25.6	29.3	27.6	25.8	22.5	45
50	-	-	19.4	22.5	23.4	22	21.4	50
55	-	-	-	19.1	20	19.9	18.7	55
60	-	-	-	17.4	18.2	19.3	17.6	60
65	-	-	-	14.1	15.2	16.1	16	65
70	-	-	-	11.5	12.6	13.4	13.7	70
75	-	-	-	-	10.1	11	11.9	75
80	-	-	-	-	8.9	9.6	10.6	80
85	-	-	-	-	8.4	9	10.1	85
90	-	-	-	-	6.8	7.5	8.6	90
95	-	-	-	-	-	6.5	7.7	95
100	-	-	-	-	-	6.1	7.4	100
105	-	-	-	-	-	5.1	6.2	105
110	-	-	-	-	-	-	5.3	110
120	-	-	-	-	-	-	3.9	120
Parts of line	12	10	8	6	5	4	3	Parts of line
Min. Angle	-	-	-	-	-	26°	33°	Min. Angle
Telescoping Status (%)								
Section 2	0	50	100	100	100	100	100	Section 2
Section 3	0	0	0	25	50	75	100	Section 3
Section 4	0	0	0	25	50	75	100	Section 4
Section 5	0	0	0	25	50	75	100	Section 5

In the interest of continual equipment development, SANY America Inc. reserves the right to change these specifications at any time without prior notification.

Unit: t

Load Chart of FJ

FJ Configuration load chart (Imperial)

Boom operation angle	Rear Counterweight is 57.3Klb, Carbody Counterweight 13.2Klb						Boom operation angle
	154.2+33.5 jib			154.2+57.4 jib			
	0°	15°	30°	0°	15°	30°	
80°	12.1	8.4	7.3	7.3	4.4	3.3	80°
78°	11.5	8.4	7.1	6.6	4.2	2.9	78°
76°	10.8	8.2	6.4	6.0	4.0	2.9	76°
74°	9.3	7.7	6.0	5.1	3.7	2.6	74°
72°	7.9	7.3	5.7	4.6	3.5	2.6	72°
70°	8.6	6.8	5.3	4.2	3.3	2.4	70°
68°	7.7	6.4	5.1	4.0	3.1	2.4	68°
66°	6.8	6.0	4.8	3.7	2.9	2.2	66°
64°	6.0	5.5	4.6	3.5	2.6	2.2	64°
62°	5.1	5.1	4.4	3.3	2.4	2.2	62°
60°	4.4	4.4	4.0	3.1	2.2	2.0	60°
58°	4.0	3.7	3.1	2.6	2.0	2.0	58°
56°	3.5	3.1	2.6	2.4	2.0	1.8	56°
54°	2.6	2.4	2.2	2.0			54°
52°	2.0						52°
Min. angle	50°						Min. angle

Note: rated capacity of crane

1. The rated load in the load chart is calculated complying with ASME B30.5.
2. All ratings in the table are calculated when the machine is sitting on firm and level ground with less than 1% gradient, and the load lifting is slowly and steadily.
3. All ratings in the table are calculated with wind speed under 22mph and tipping load of 75%.
4. All ratings in the table are valid for 360° swing.
5. The rated load is no more than 18Klb (8.2mt) when using auxiliary boom sheave. If the jib is extended, the boom rated load shall reduce 5.1Klb (2.3mt).
6. The ratings in the table include the weight of hook block and riggings (main hook block of 2.3Klb (1.05t), aux. hook block of 0.8Klb (0.35t). The weight of hook, riggings and wire ropes shall be deducted from the ratings to get the actual load capacity.

In the interest of continual equipment development, SANY America Inc. reserves the right to change these specifications at any time without prior notification.

In the interest of continual equipment development, SANY America Inc. reserves the right to change these specifications at any time without prior notification.

In the interest of continual equipment development, SANY America Inc. reserves the right to change these specifications at any time without prior notification.

Service

When we say that SANY machines are built to endure, we're really talking about service. SANY equipment is intentionally designed to be easily and efficiently serviced, with features such as wide compartment doors and easy access to make maintenance more efficient. Because ease of service means back in service.

We've Got Your Back

To provide peace of mind and ensure maximum uptime, all SANY cranes are backed by a robust 3-year/3,000-hour standard warranty. That's our commitment to keeping your fleet running at peak performance.



*Warranty applies to 2026 Crane models only.

SANY America Inc.

318 Cooper Circle

Peachtree City | GA 30269

| T | 470-552-SANY

***WARRANTY APPLIES TO 2023 MODELS**

CRABR26SCA900TB003

sanyamerica.com

In the interest of continual equipment development, SANY America Inc. reserves the right to change these specifications at any time without prior notification.

© 2026 SANY AMERICA INC.